TABLE TOP MOUNT

TTS100

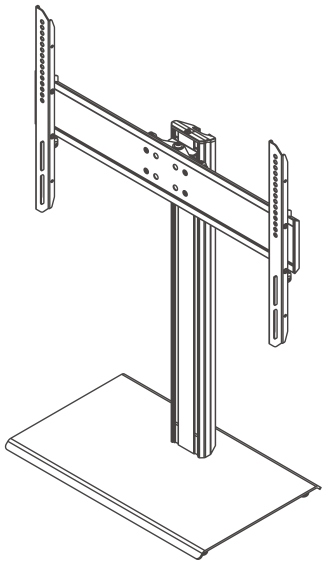

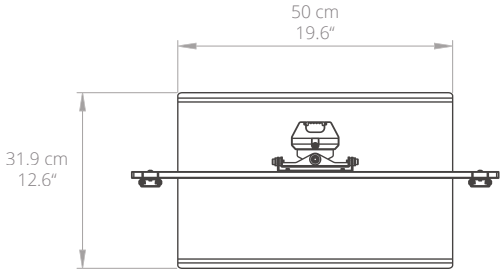

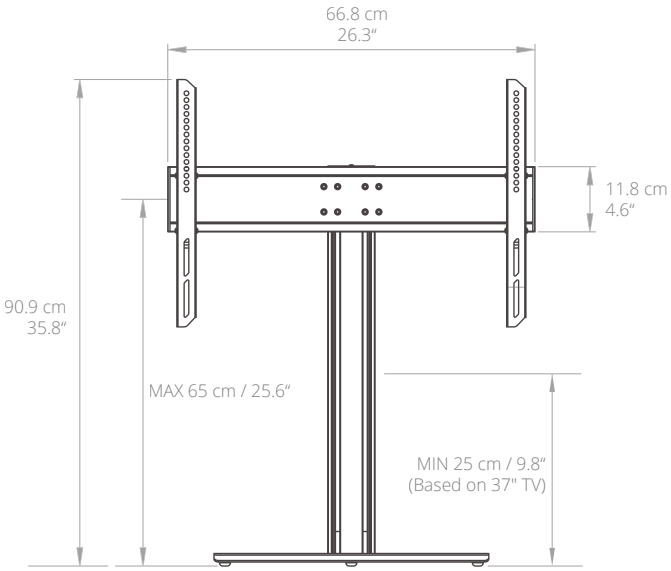

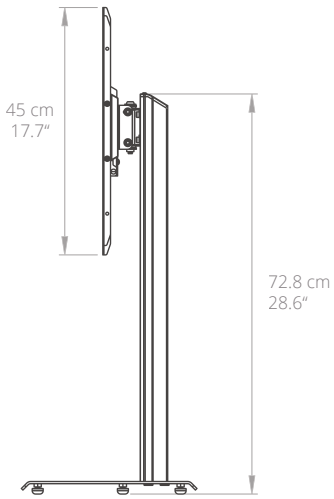

kanto
kantomounts.com