TILTING DUAL STUD MOUNT

T3760

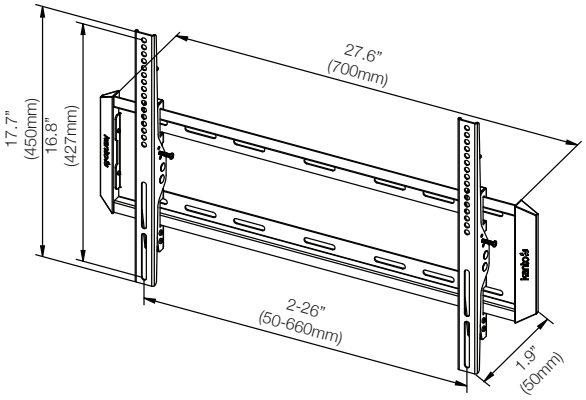

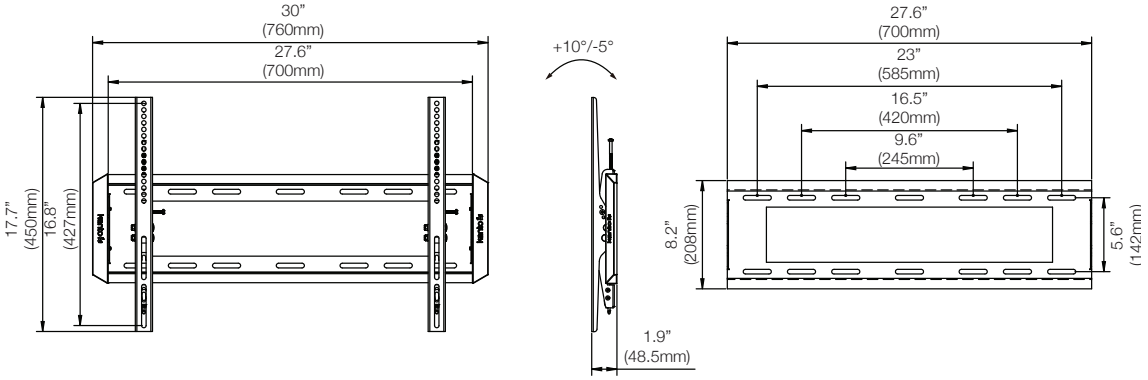

kanto
kantomounts.com