FULL MOTION RECESSED MOUNT

R500

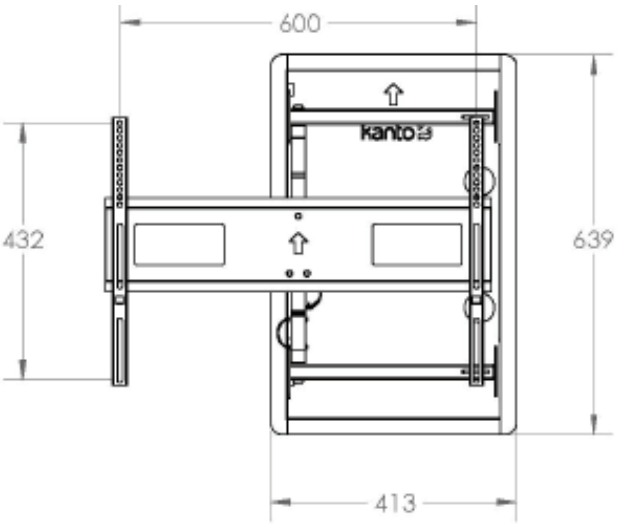

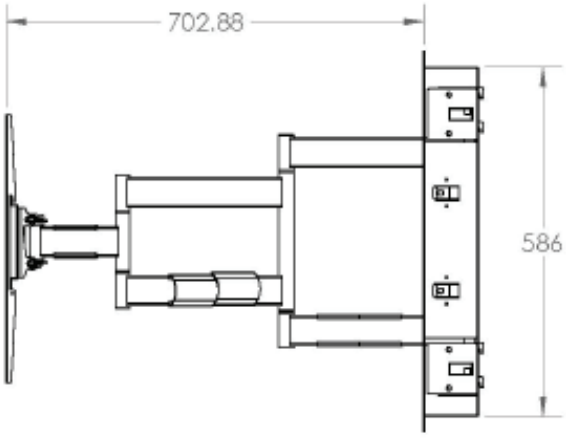

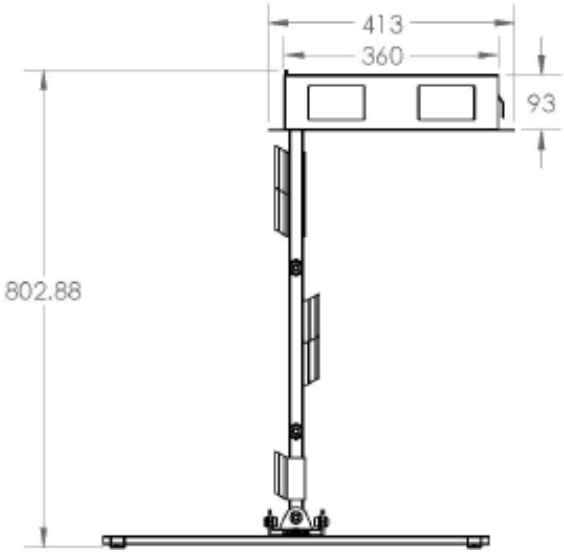

kanto
kantomounts.com