FULL MOTION RECESSED MOUNT

# R300

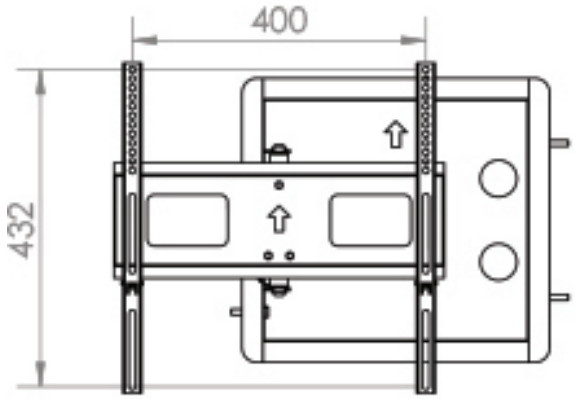


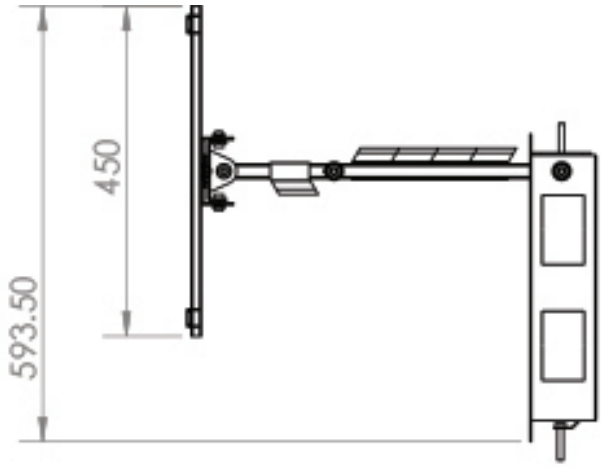


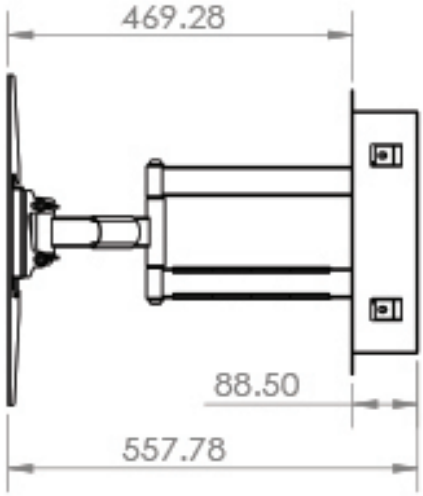


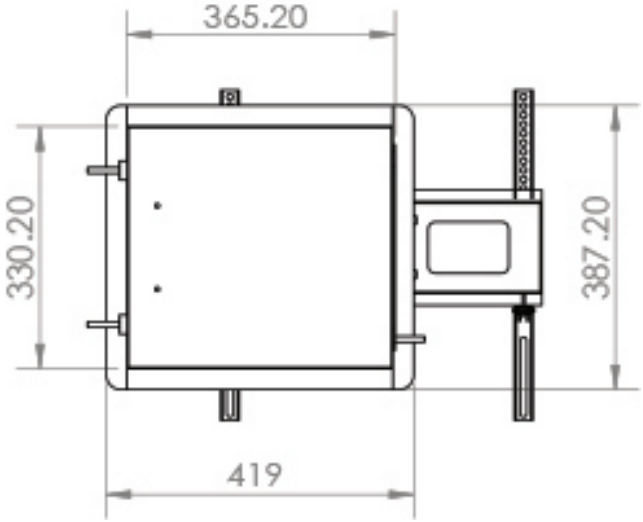


kanto
kantomounts.com