FULL MOTION SINGLE STUD MOUNT

PS400

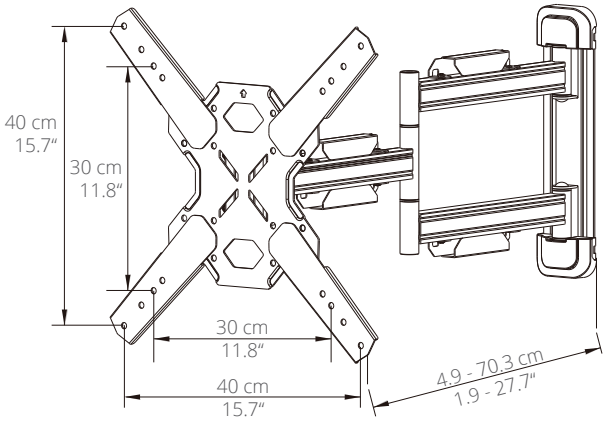

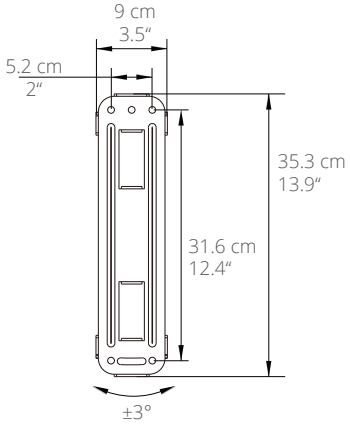

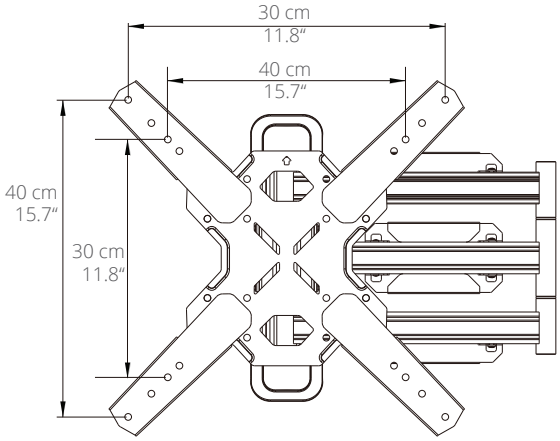

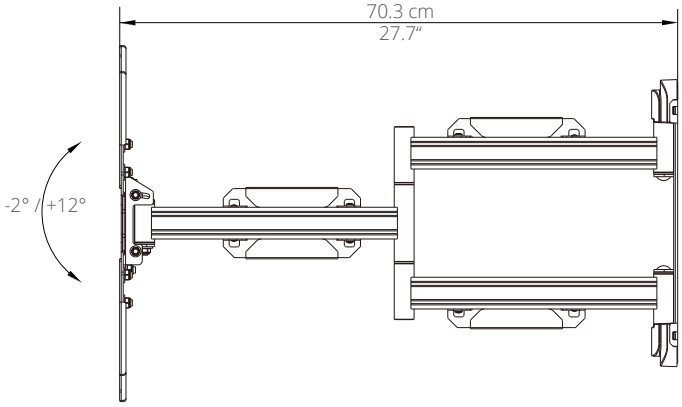

kanto
kantomounts.com