FULL MOTION SINGLE STUD MOUNT

PS200

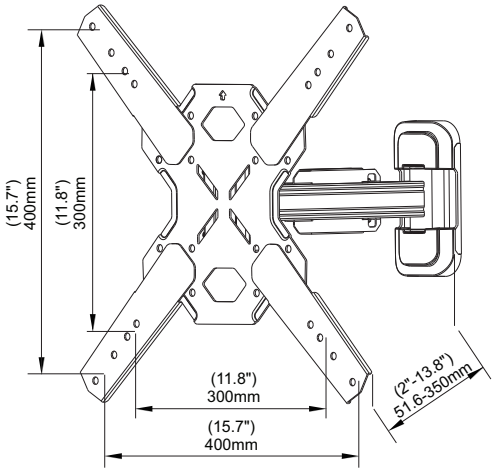

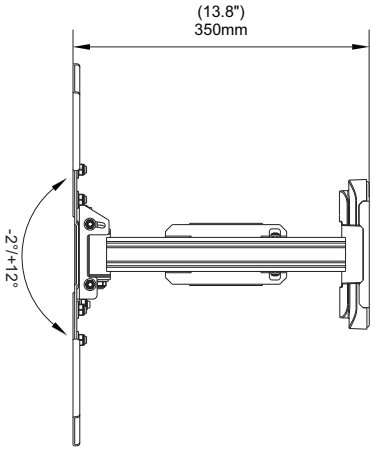

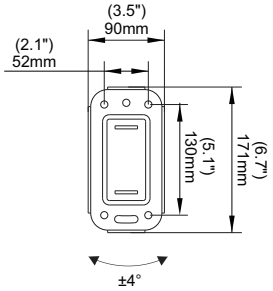

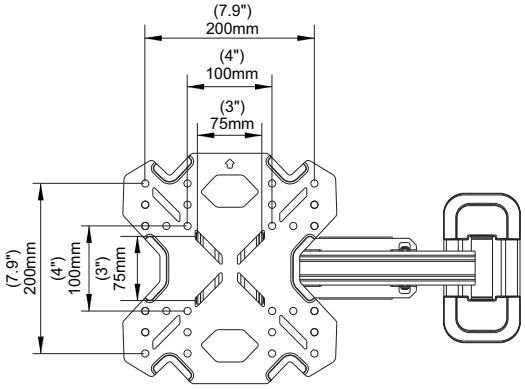

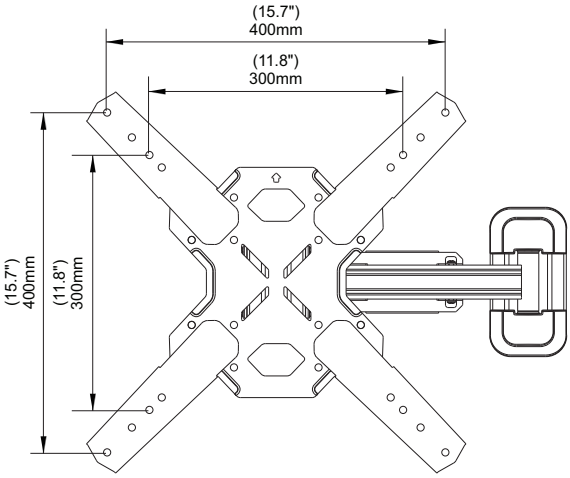

kanto
kantomounts.com