TILTING SINGLE STUD MOUNT

PS100

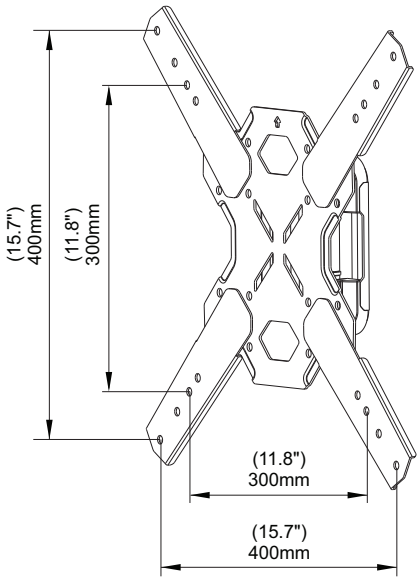

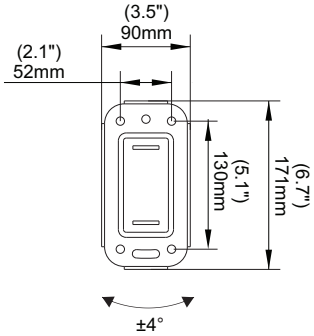

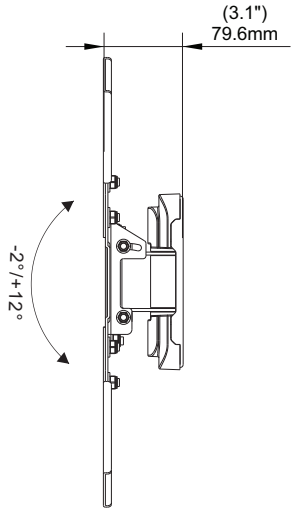

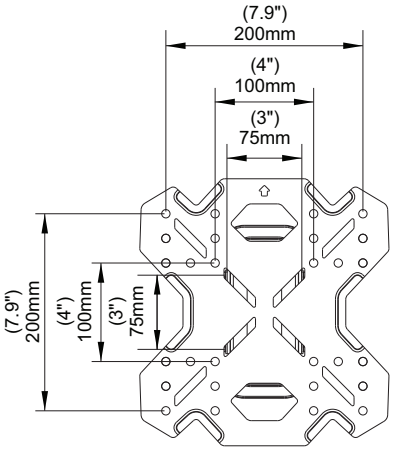

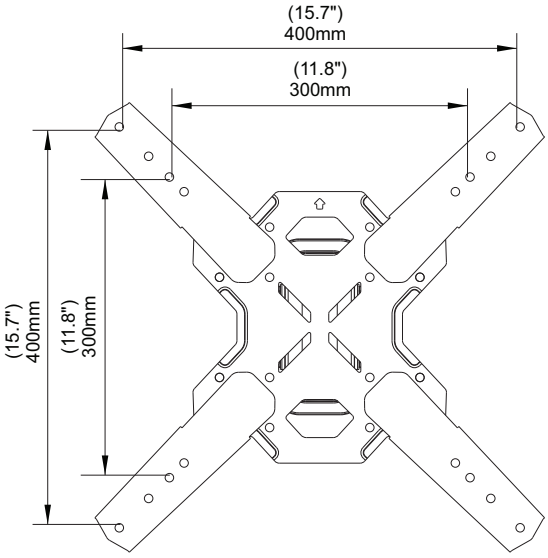

kanto
kantomounts.com