FULL MOTION DUAL STUD MOUNT - PRO SERIES

PMX660

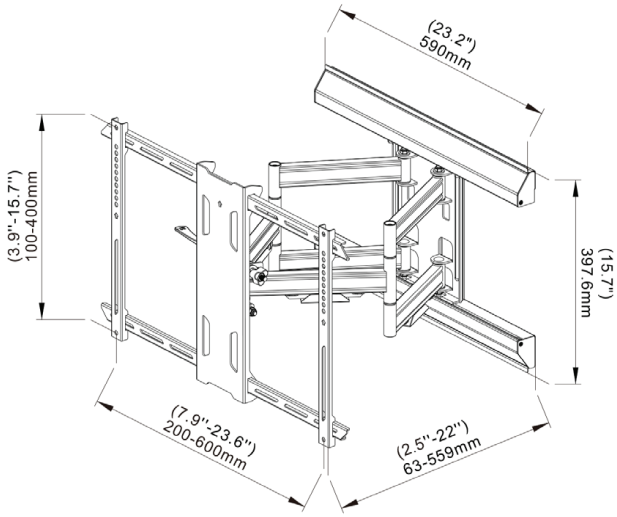

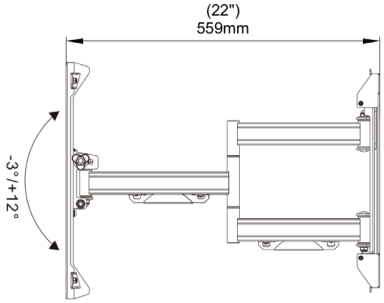

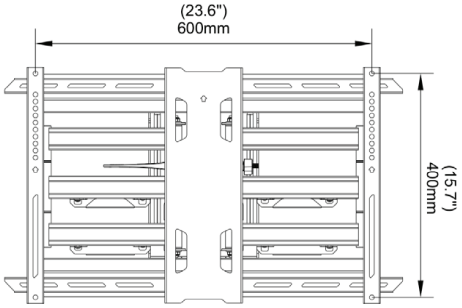

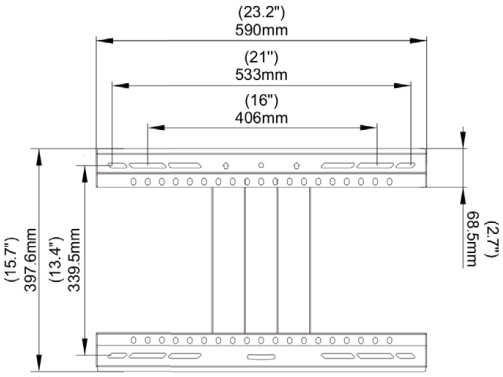

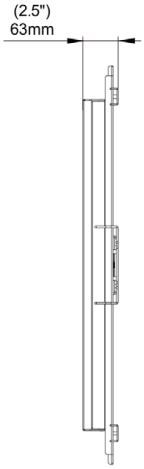

kanto
kantomounts.com