FULL MOTION DUAL STUD MOUNT

PDX700

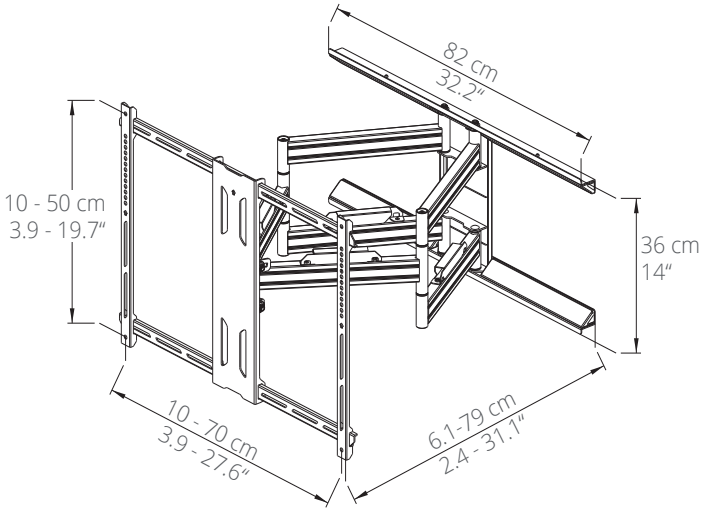

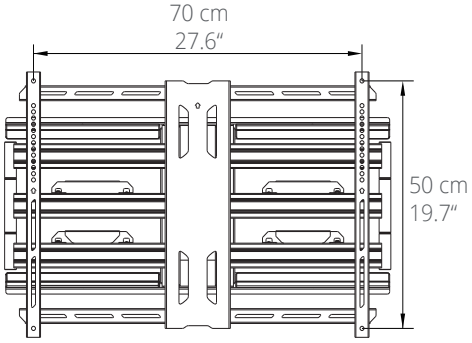

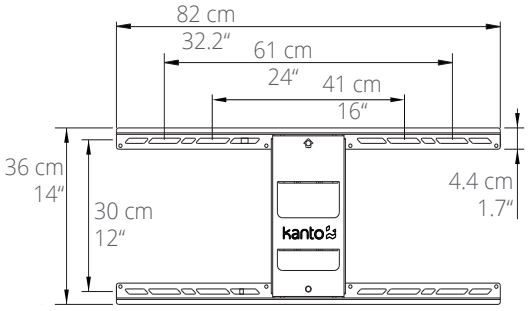

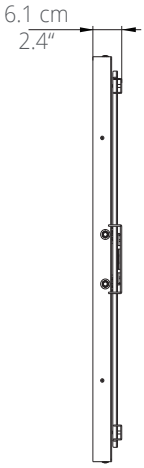

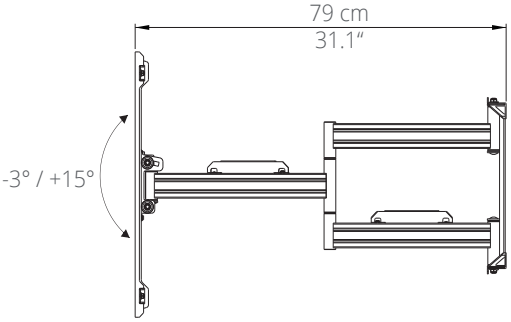

kanto
kantomounts.com