FULL MOTION DUAL STUD MOUNT

PDX650

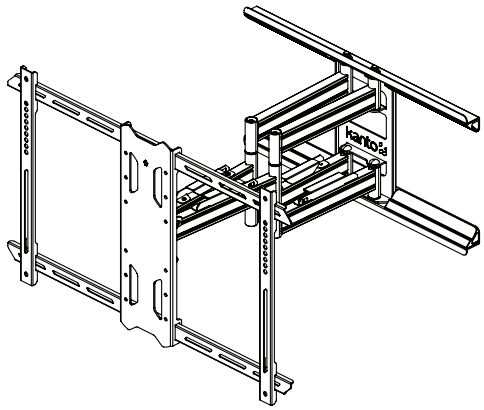

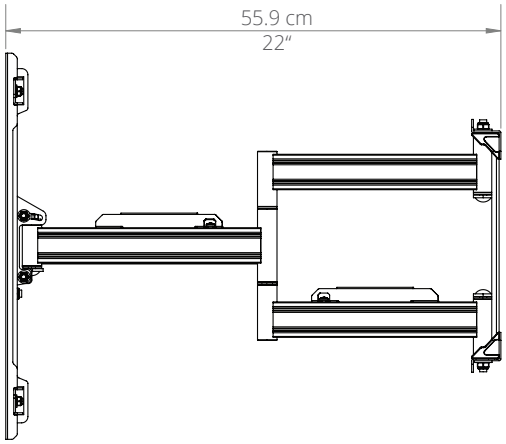

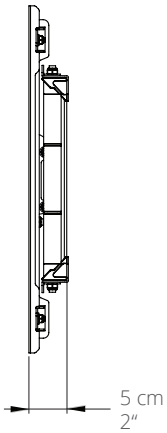

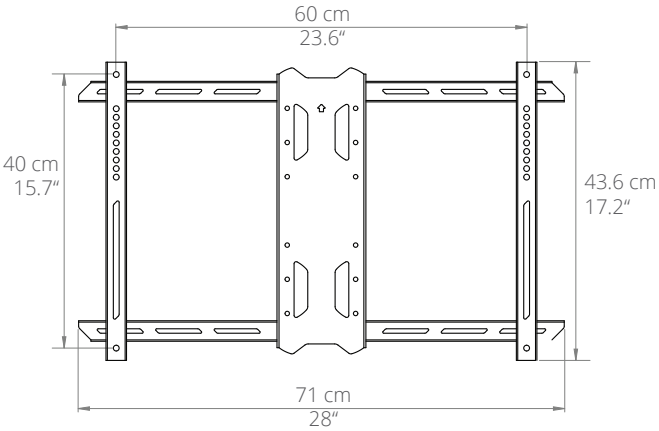

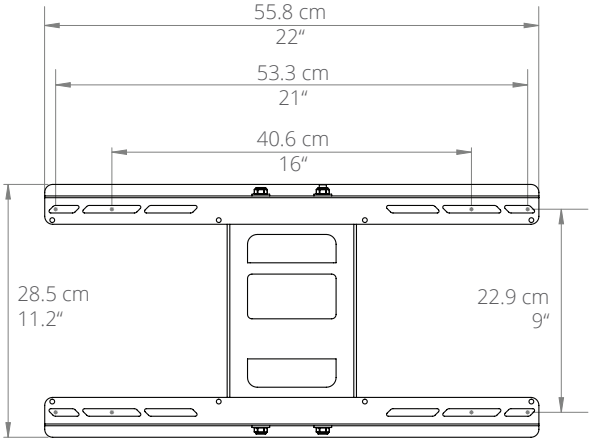

kanto
kantomounts.com