PROJECTOR MOUNT

P101

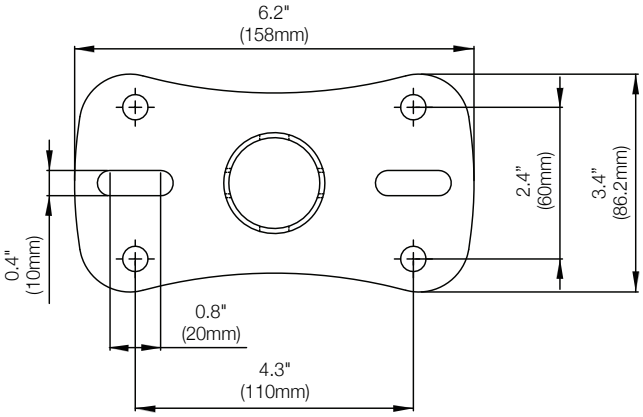

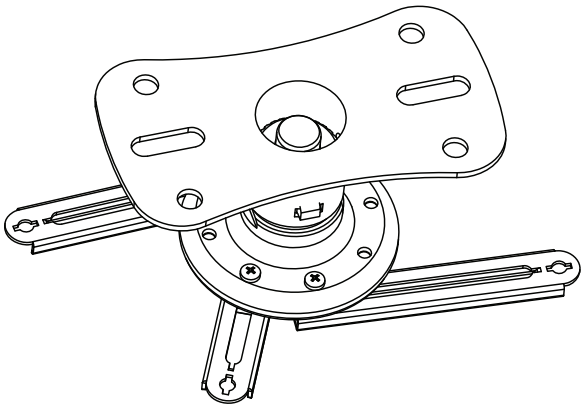

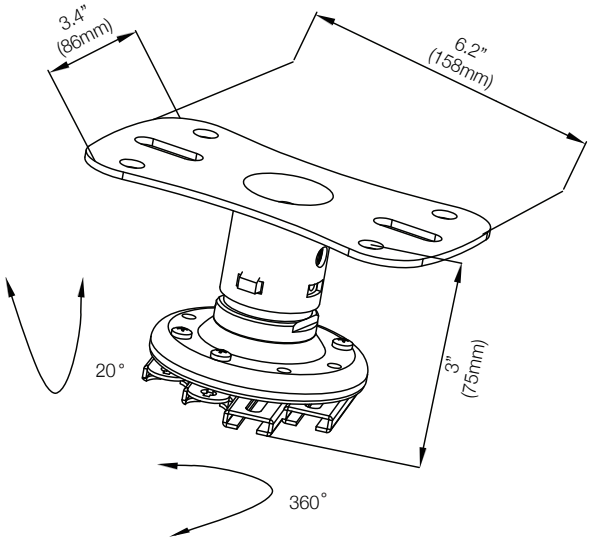

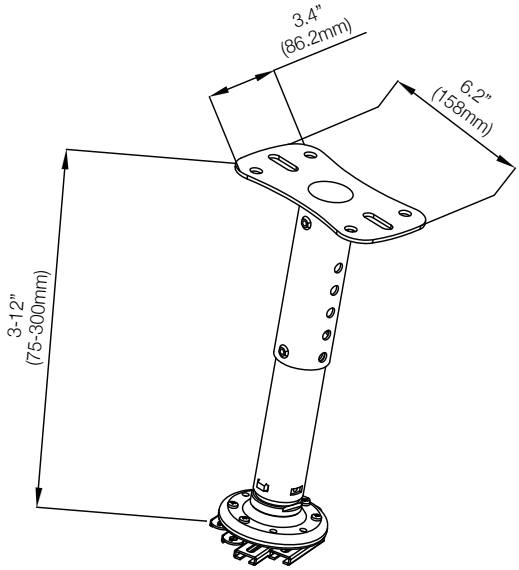

kanto
kantomounts.com