MOBILE TV MOUNT

MTM82PL

SHELF AND TRAY

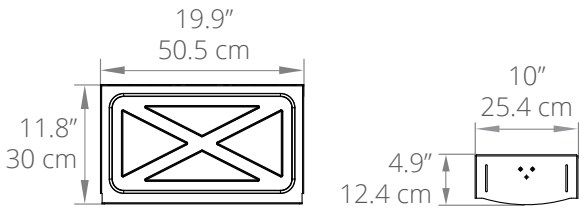

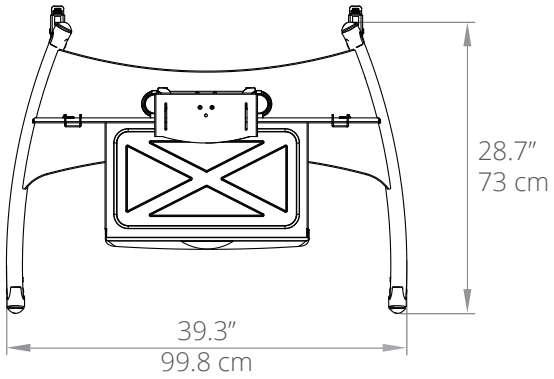

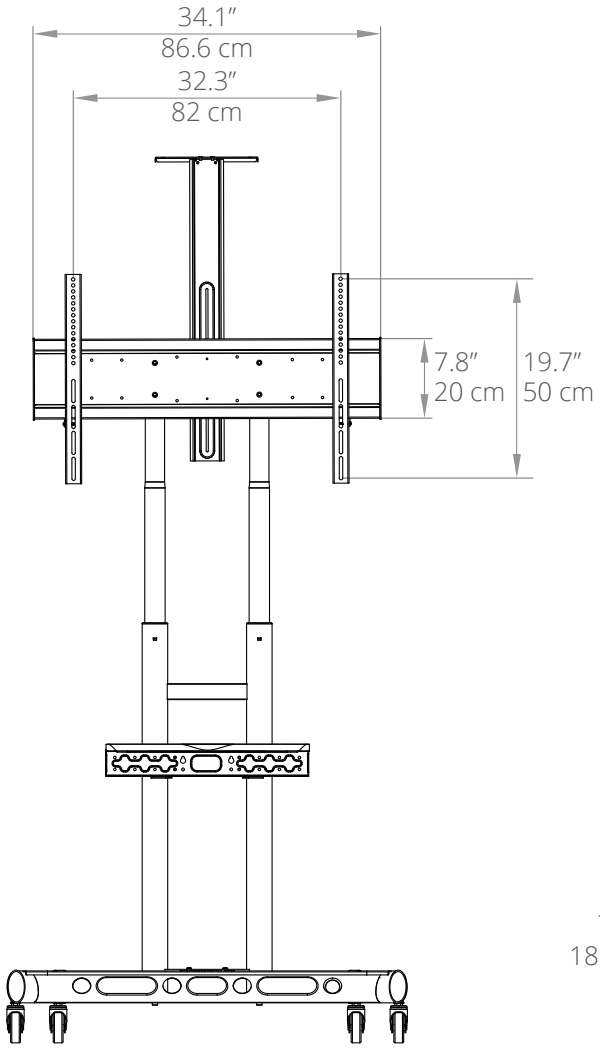

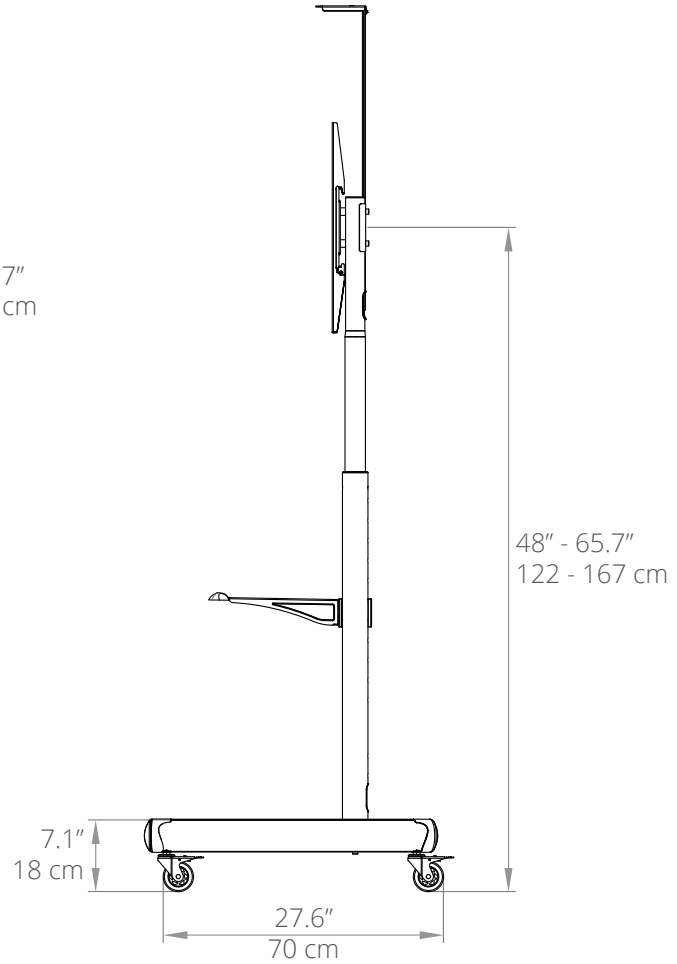

kanto
kantomounts.com