MOBILE TV MOUNT

MTM65PL

SHELF AND TRAY

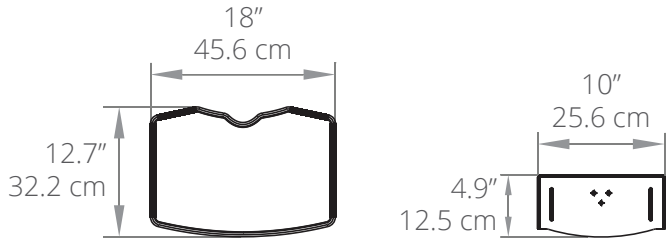

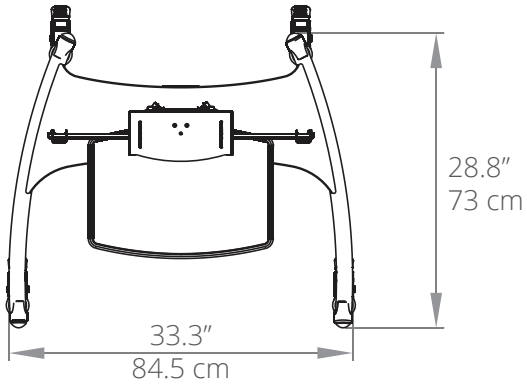

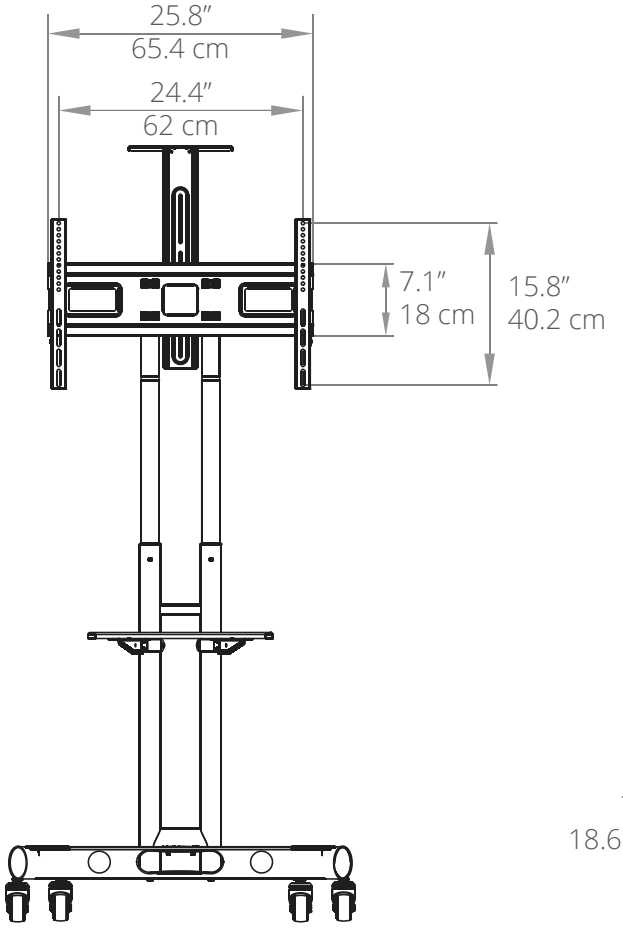

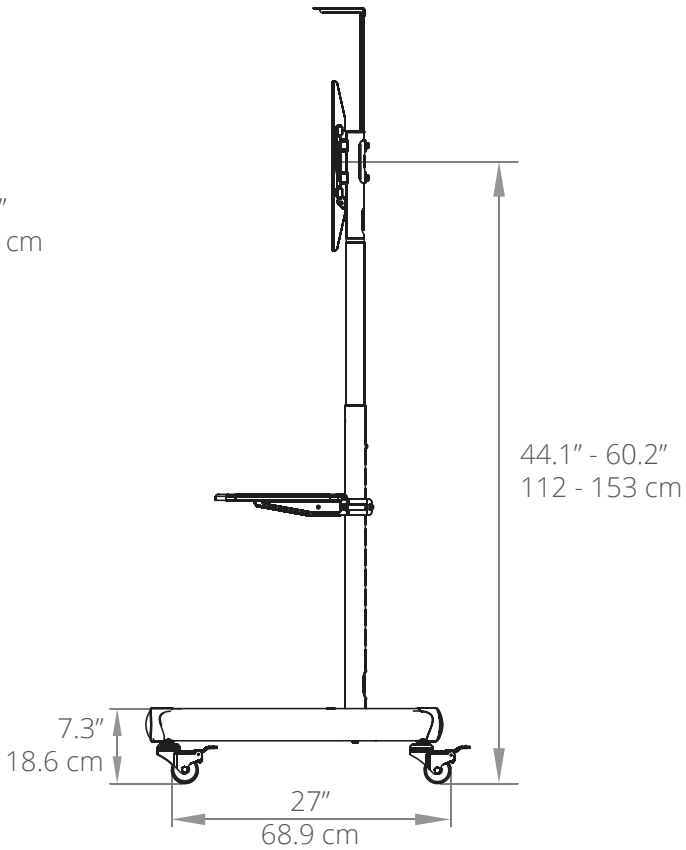

kanto
kantomounts.com