FULL MOTION SINGLE STUD MOUNT

M600

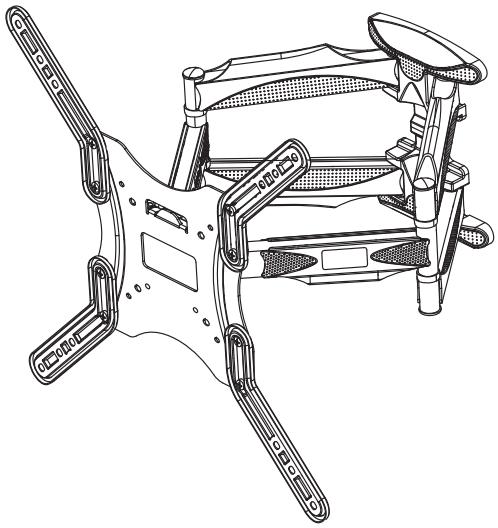

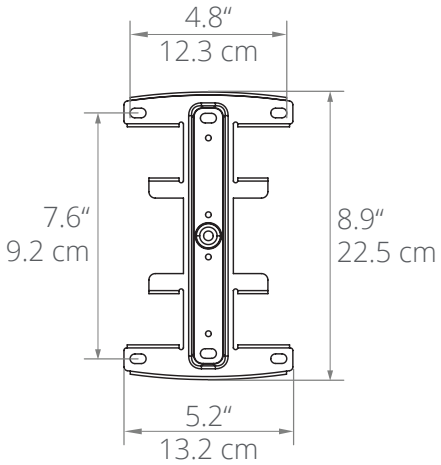

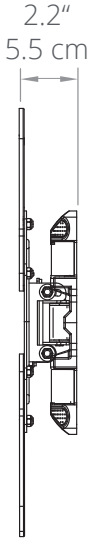

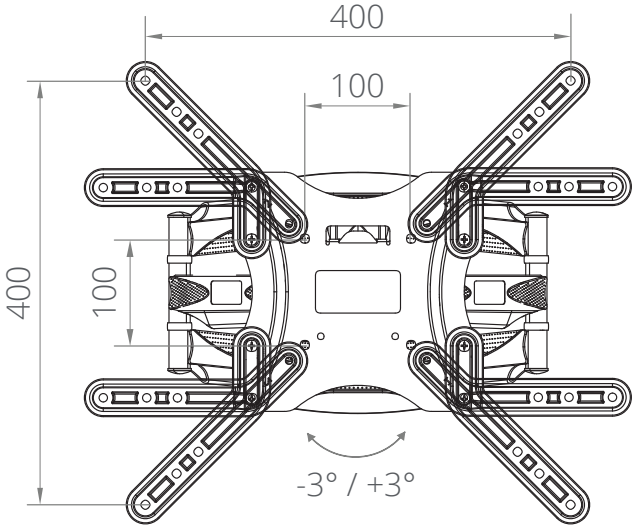

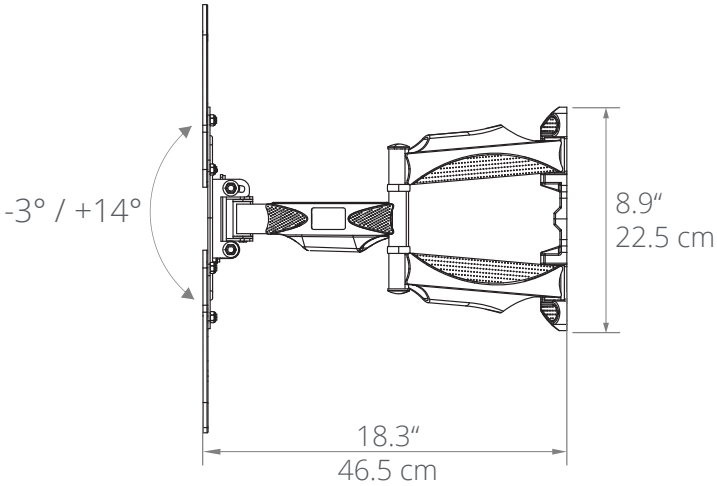

kanto
kantomounts.com