FULL MOTION DUAL STUD MOUNT

LDX640

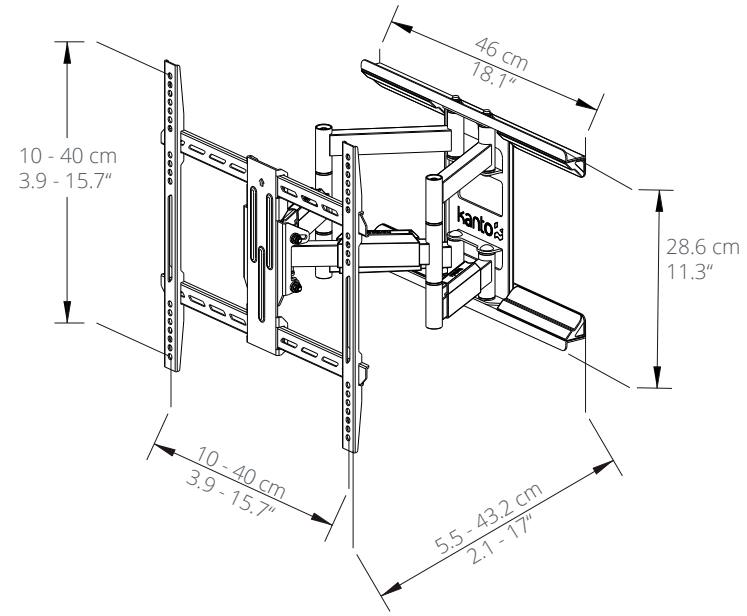

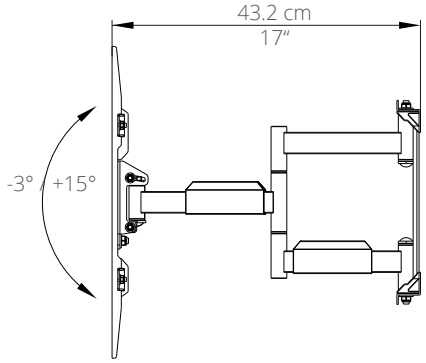

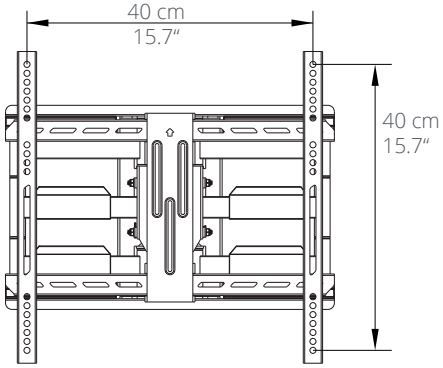

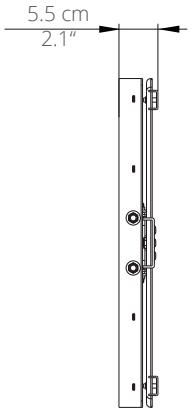

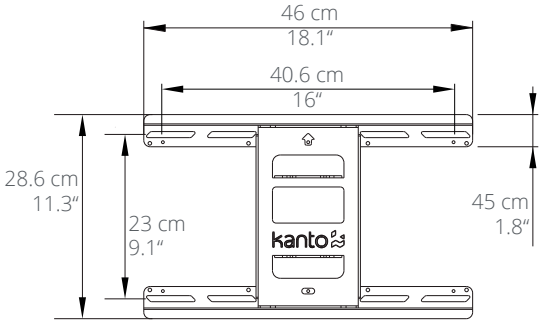

kantomounts.com