TILTING DUAL STUD MOUNT

KT3260

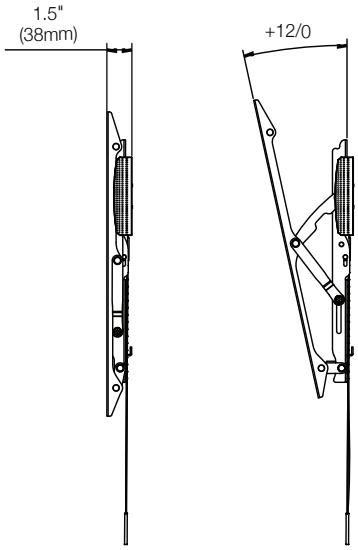

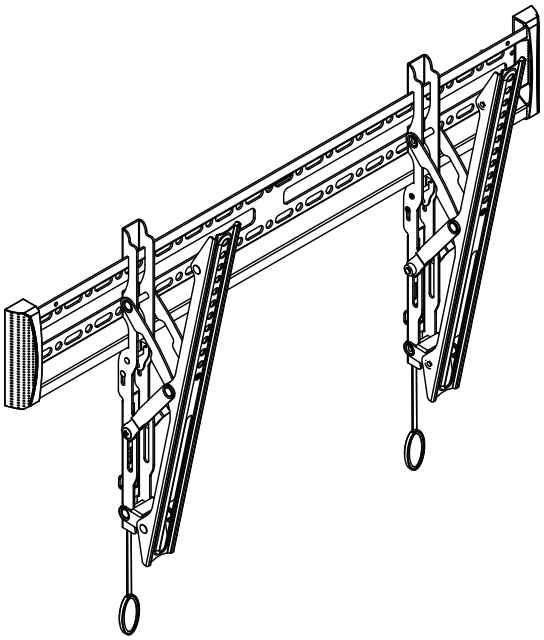

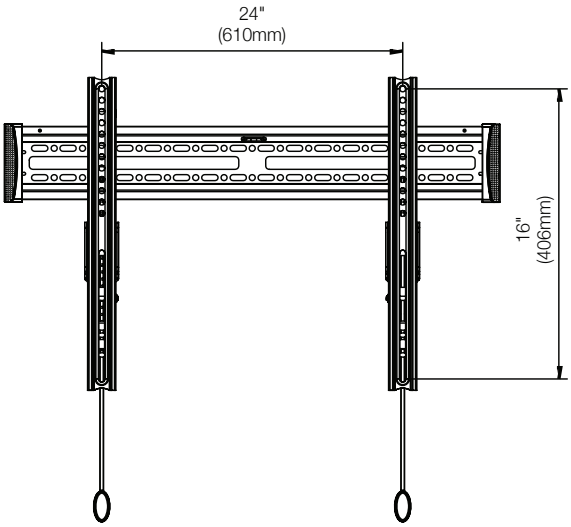

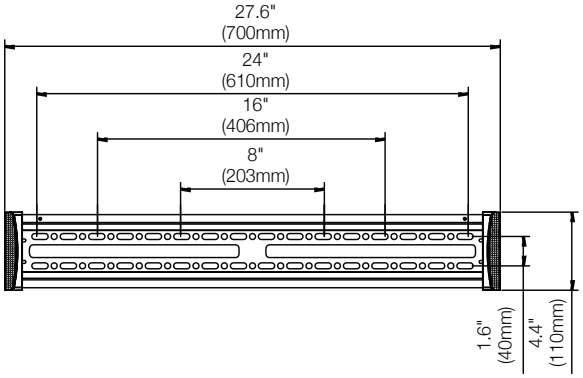

kanto
kantomounts.com