FULL MOTION DUAL STUD MOUNT

FMX3

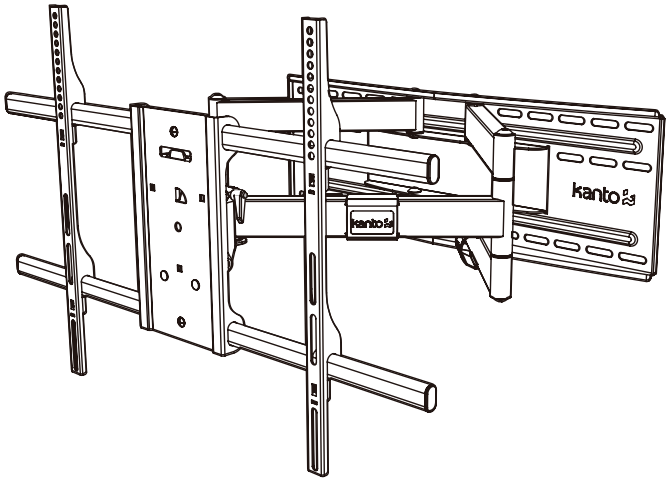

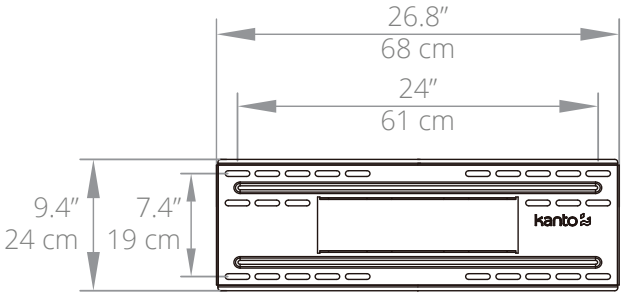

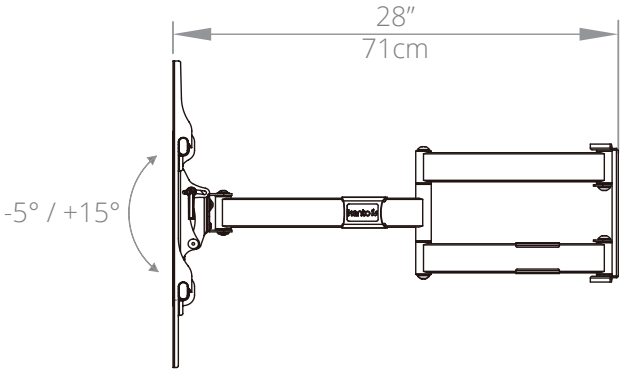

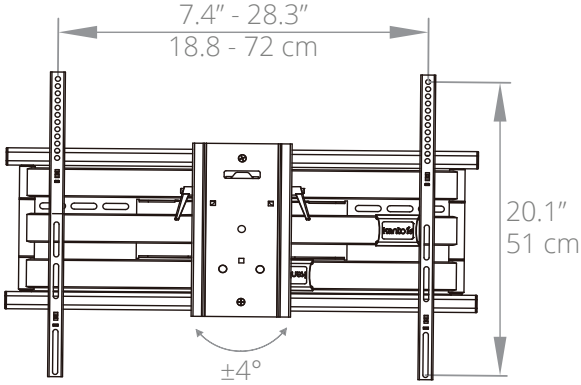

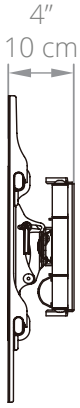

kanto
kantomounts.com