DUAL ARM DESKTOP MONITOR MOUNT

DMS2000

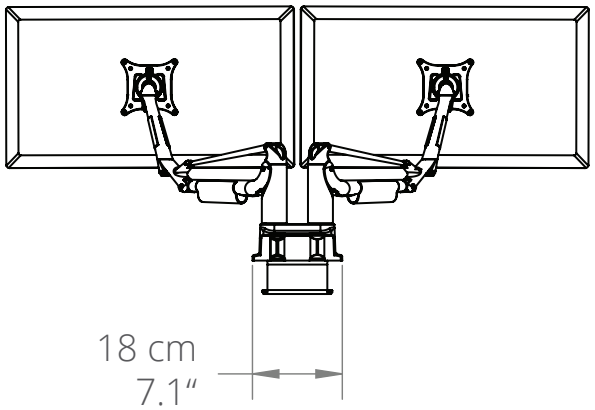

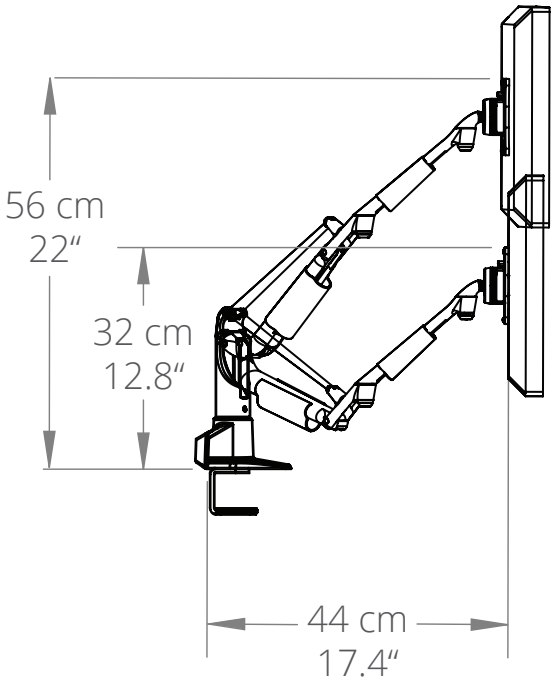

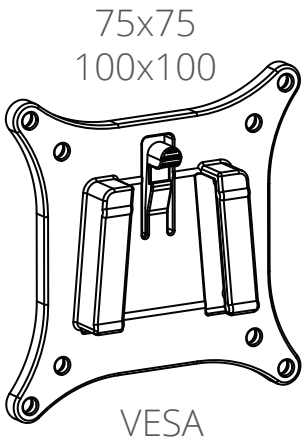

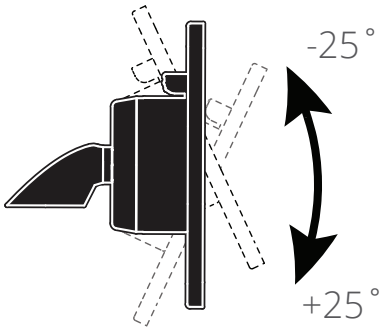

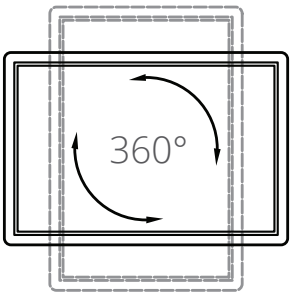

kanto
kantomounts.com