DESKTOP MONITOR MOUNT

DMS1000

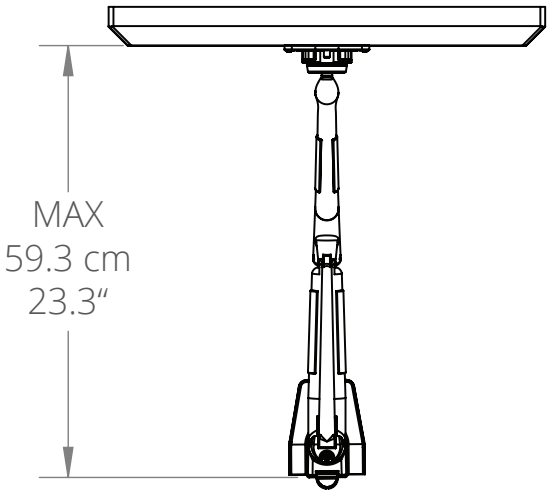

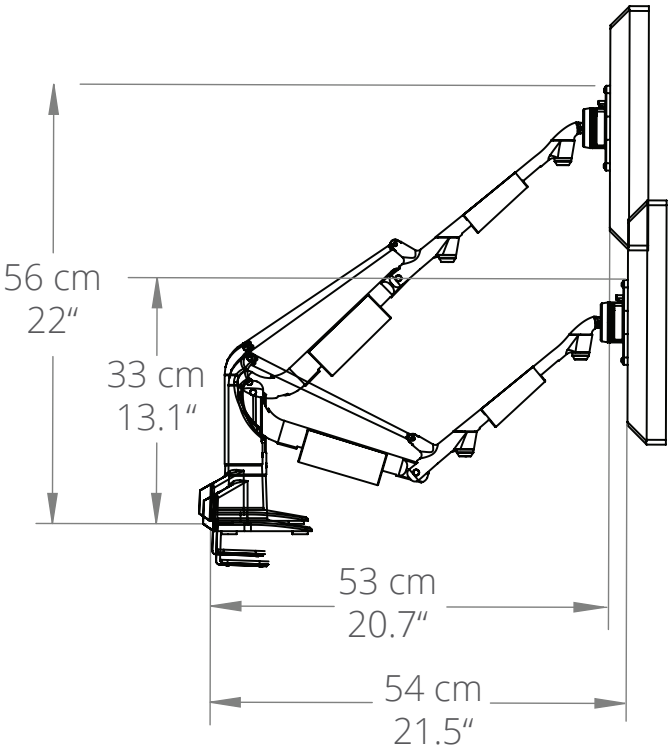

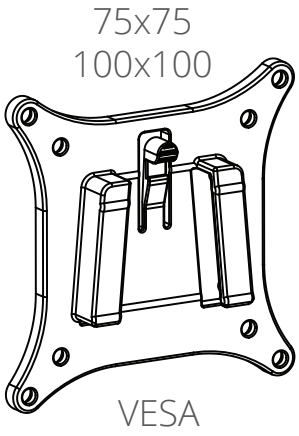

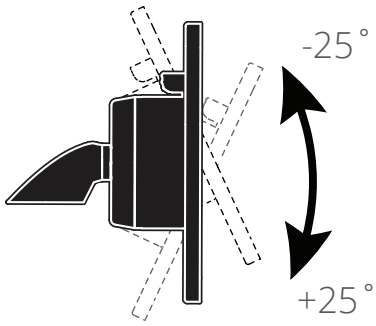

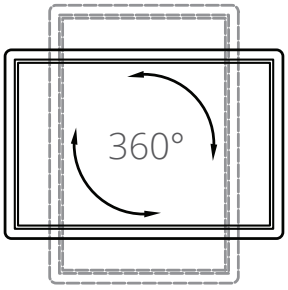

kanto
kantomounts.com