SINGLE ARM DESKTOP MONITOR MOUNT

DM1000

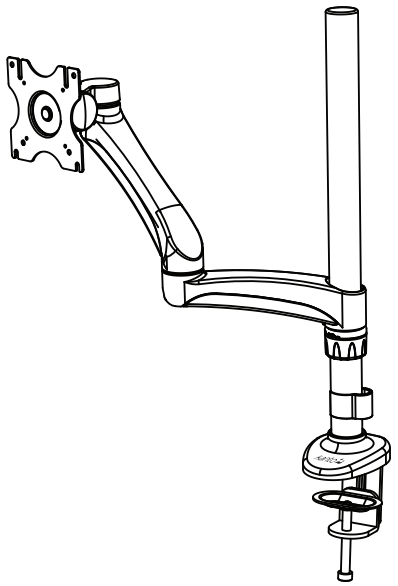

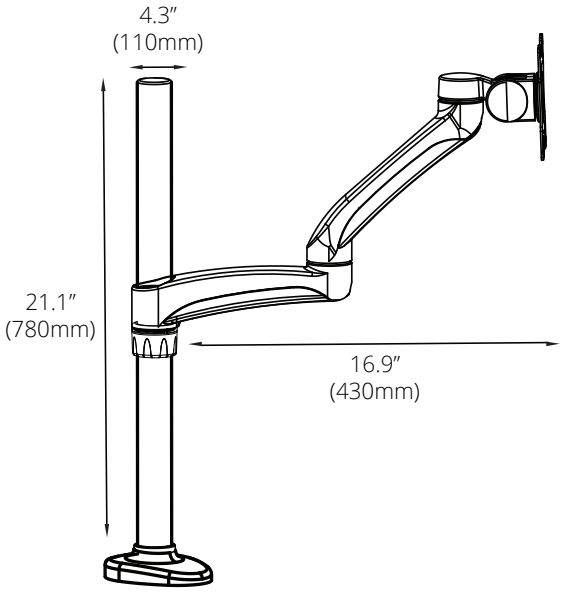

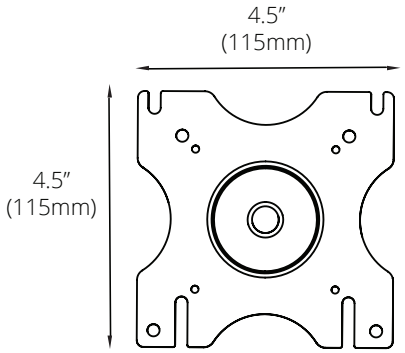

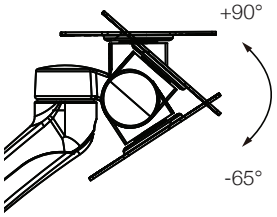

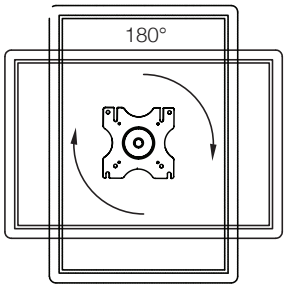

kanto
kantomounts.com