FULL MOTION CEILING MOUNT

CM600

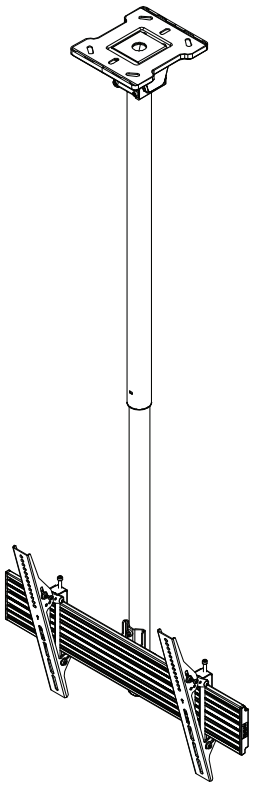

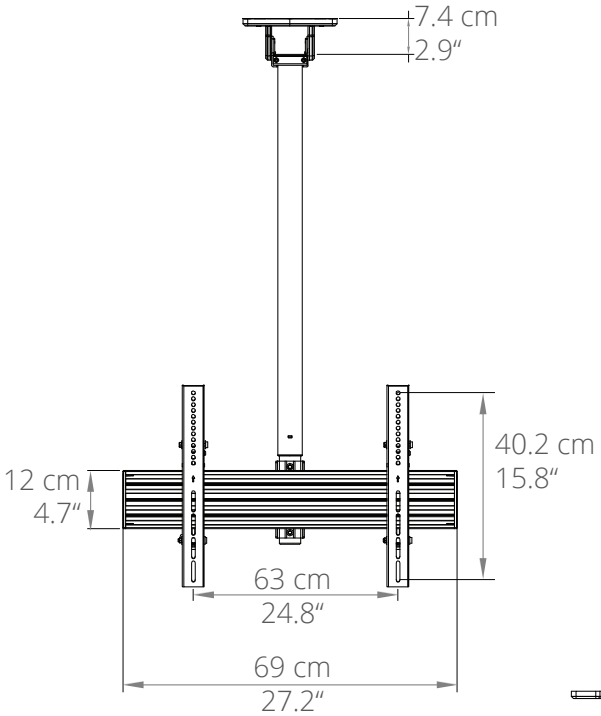

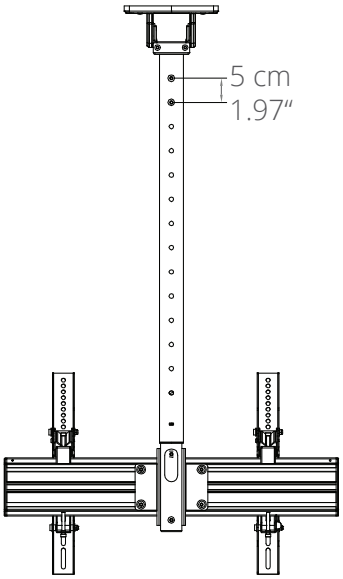

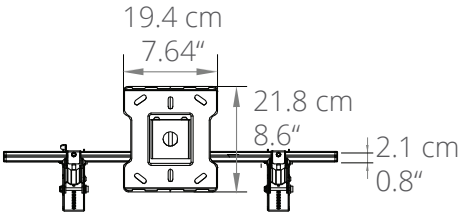

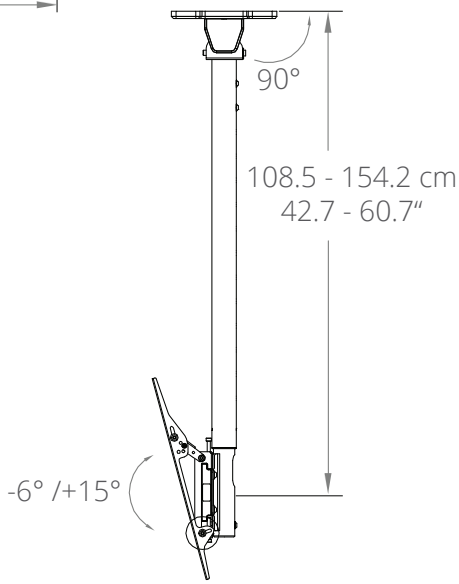

kantomounts.com